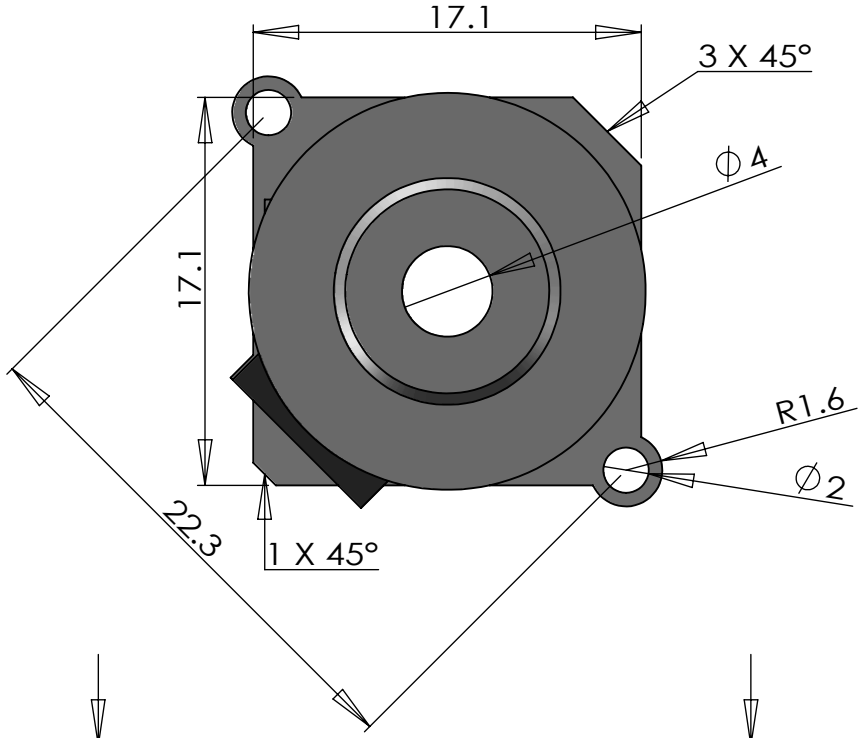

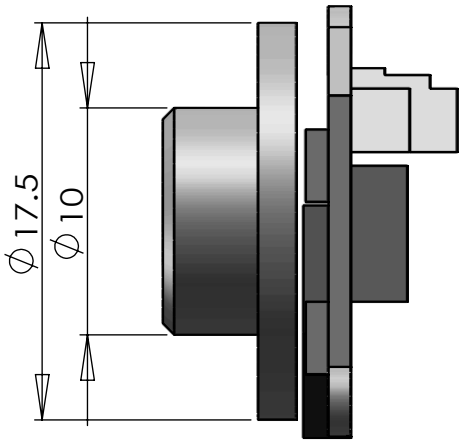

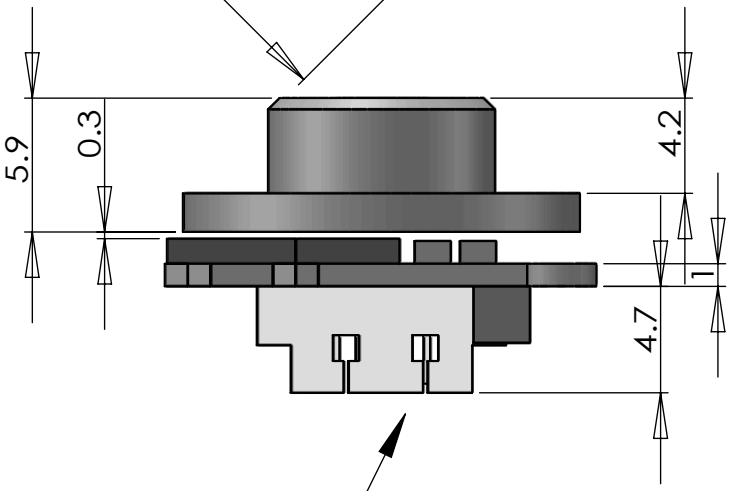

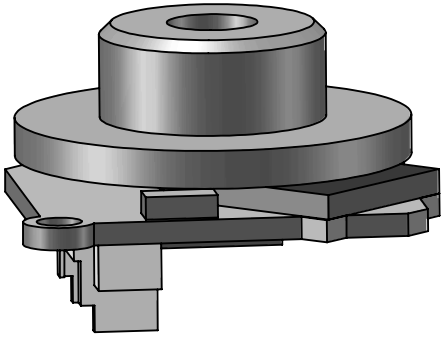

This PCB20 form fact is suitable for Incremental 1000 PPR/5V/NPN OC Temperatur Range is -40deg~+125deg

Male Connector on PCB
1. VCC(DC5V)
2. A
3. B
4. Z
5. GND

PROPRIETARY AND CONFIDENTIAL
THE INFORMATION CONTAINED IN THIS DRAWING IS THE SOLE PROPERTY OF Bluencoder(Suzhou) Technolgy Co.Ltd. ANY REPRODUCTION IN PART OR AS A WHOLE WITHOUT THE WRITTEN PERMISSION OF Bluencoder(Suzhou) Technolgy Co.Ltd IS PROHIBITED.

NEXT ASSY	USED ON
APPLICATION	

DIMENSIONS ARE IN MM
TOLERANCES: ±0.1
FRACTIONAL ±
ANGULAR: MACH ± BEND ±
TWO PLACE DECIMAL ±
THREE PLACE DECIMAL ±

MATERIAL --

FINISH --

DO NOT SCALE DRAWING

	NAME	DATE
DRAWN		
CHECKED		
ENG APPR.		
MFG APPR.		
Q.A.		

COMMENTS:

EI20H04

Blue encoder(Suzhou)

ALLBLUE

Embeded Incremental Encoder

SIZE	DWG. NO.	REV.
A		v1.0

SCALE: WEIGHT: SHEET OF